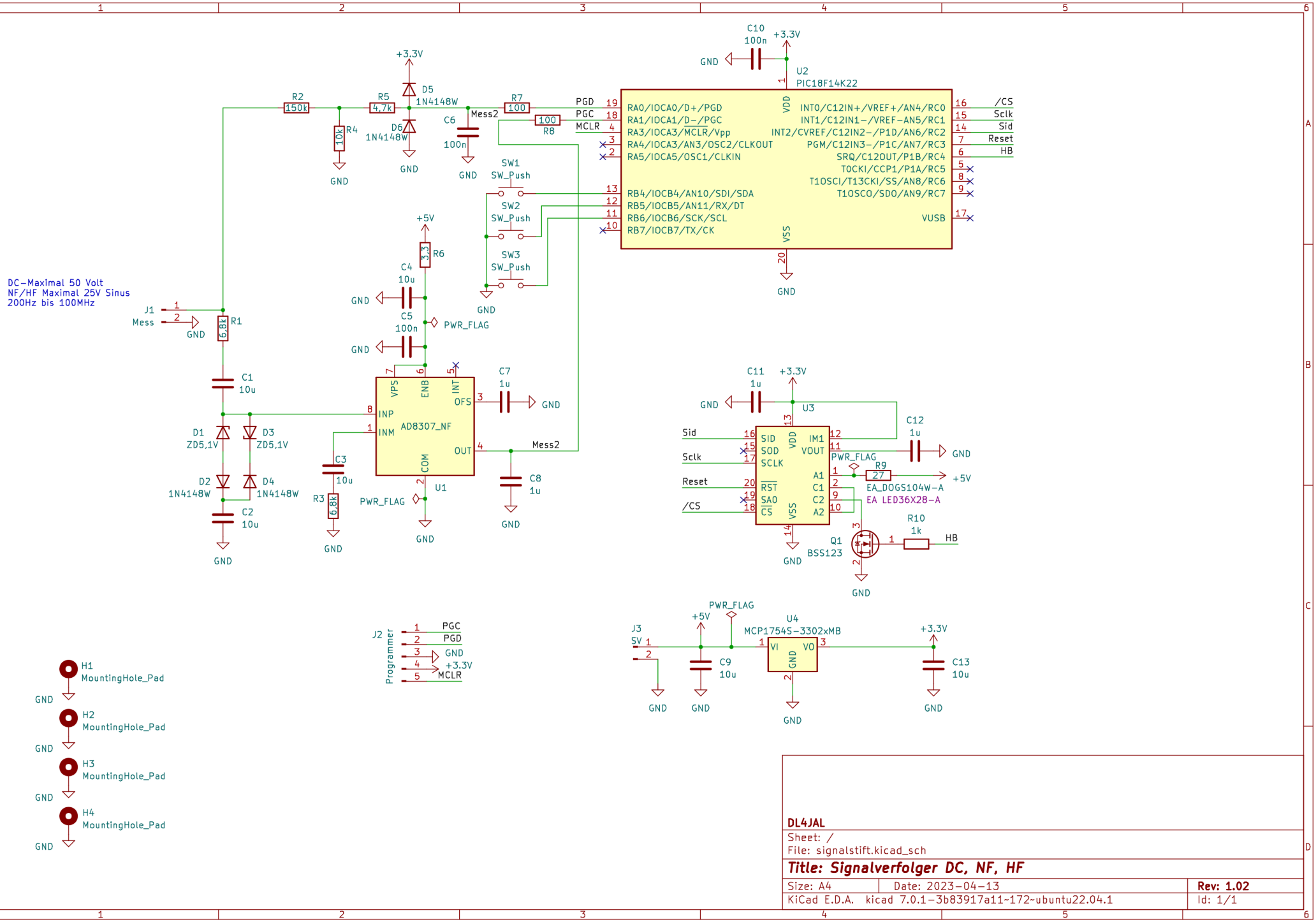


**DL4JAL**

Sheet: /

File: signalstift.kicad_sch

**Title: Signalverfolger DC, NF, HF**

| | | |
|---|---|---|
| Size: A4 | Date: 2023-04-13 | **Rev: 1.02** |
| KiCad E.D.A. kicad 7.0.1-3b83917a11~172~ubuntu22.04.1 | | Id: 1/1 |