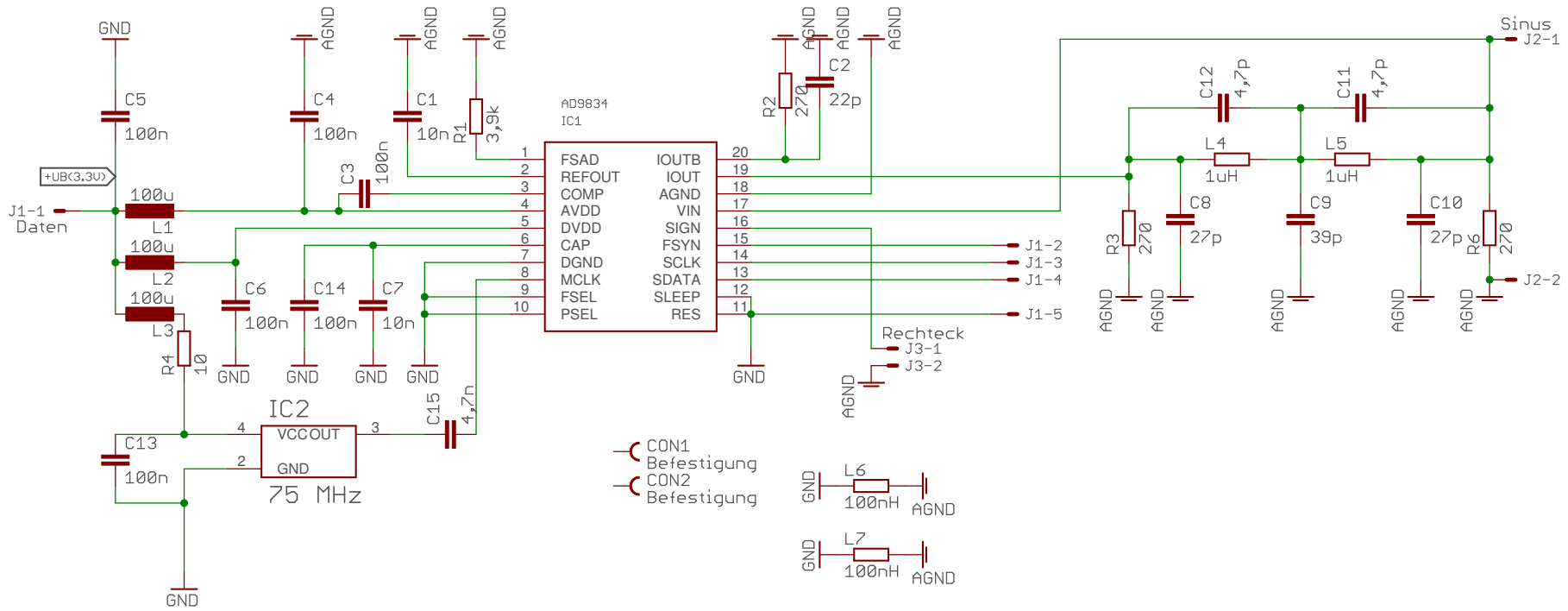

TITLE: ddsbg3	
Document Number:	REV:
Date: 07.05.17 14:58	Sheet: 1/1